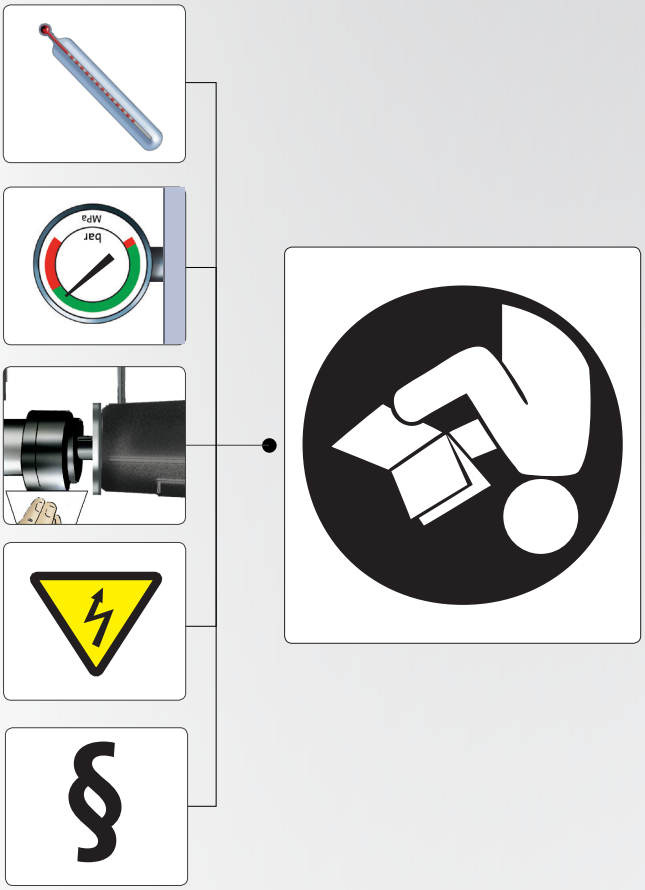

GRUNDFOS Holding A/S
Poul Due Jensens Vej 7
DK-8850 Bjerringbro
Tlf.: +45-87 50 14 00

96765996 0115

ECM: 1143238

be think innovate

GRUNDFOS

The name Grundfos, the Grundfos logo, and the payoff be think innovate are registered trademarks owned by Grundfos Holding A/S or Grundfos A/S, Denmark. All rights reserved worldwide.

GRUNDFOS **INSTRUCTIONS**

NK/NKG

QUICK GUIDE

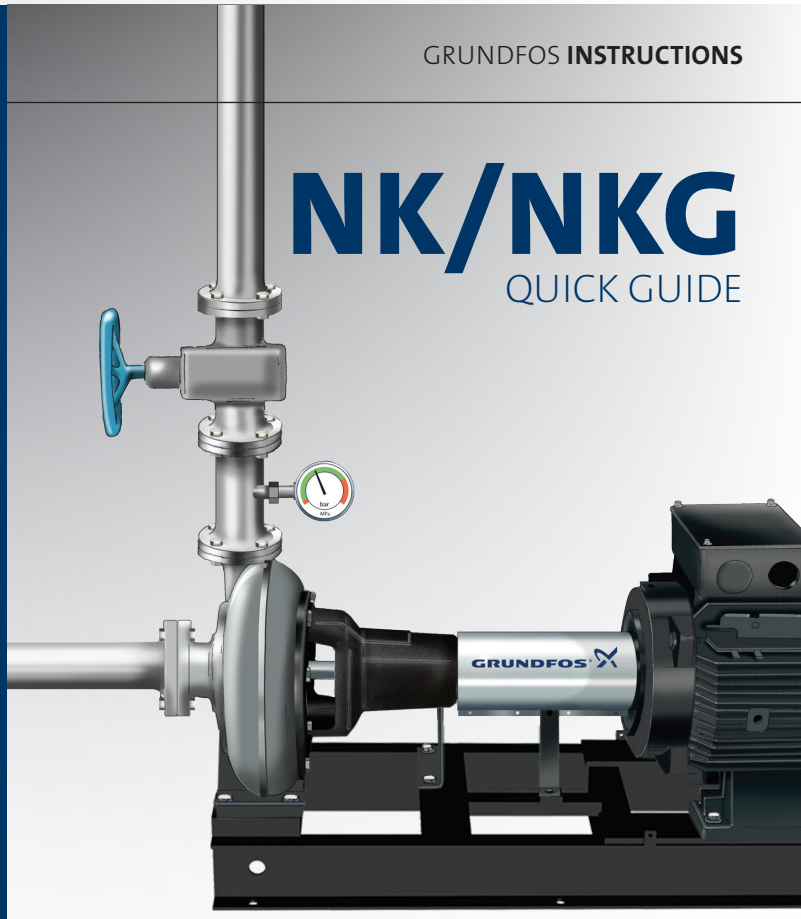

be
think
innovate

GRUNDFOS

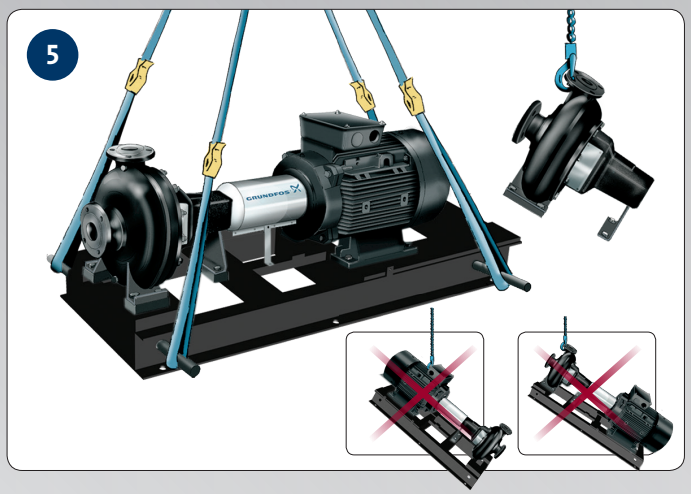
5

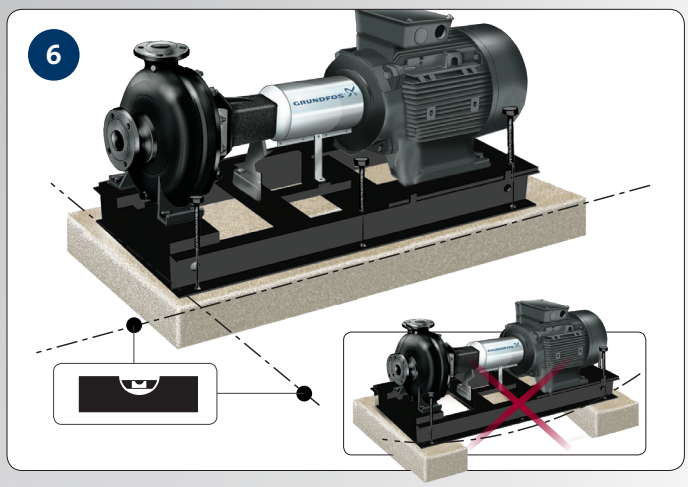
6

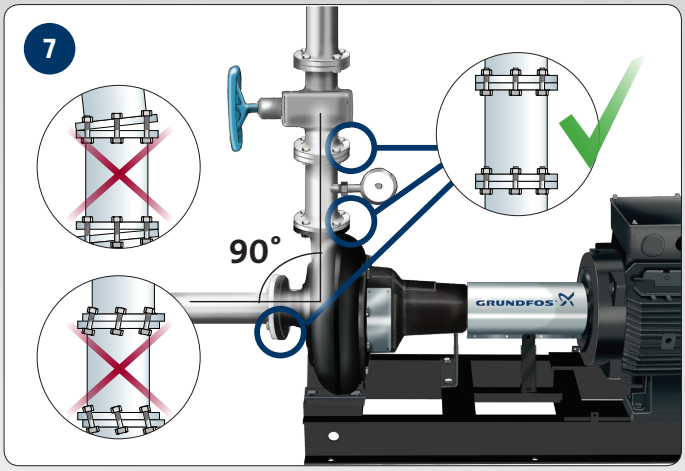
7
90°
GRUNDFOS

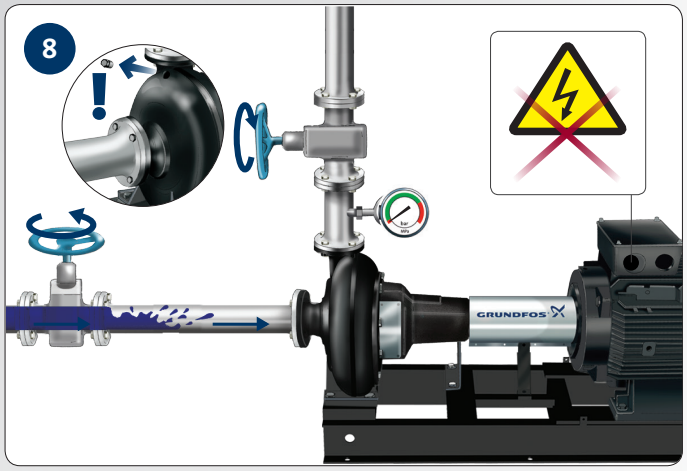
8
GRUNDFOS

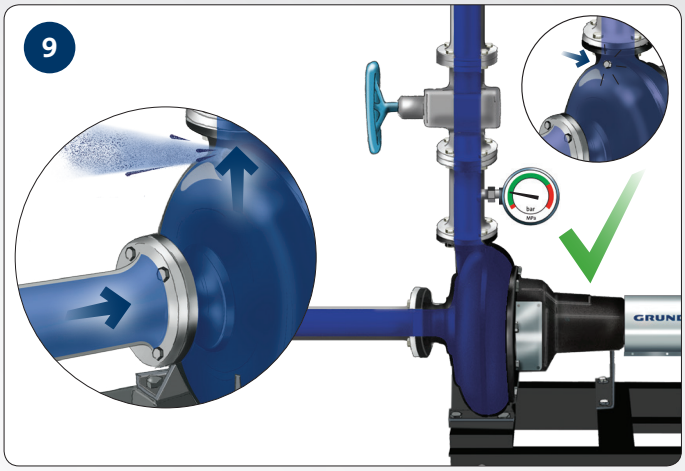
9

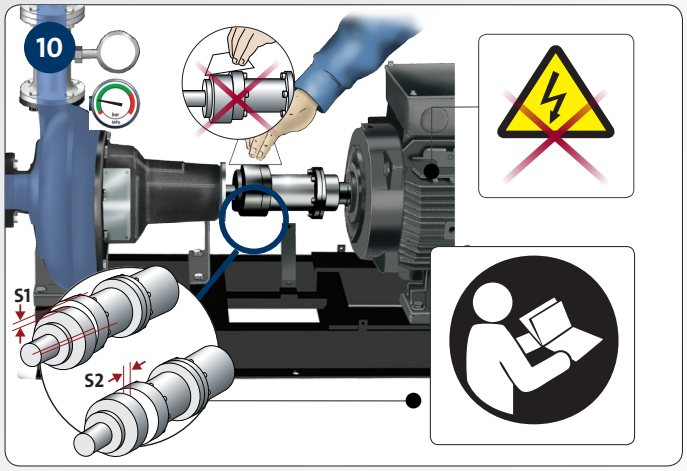
10
S1
S2

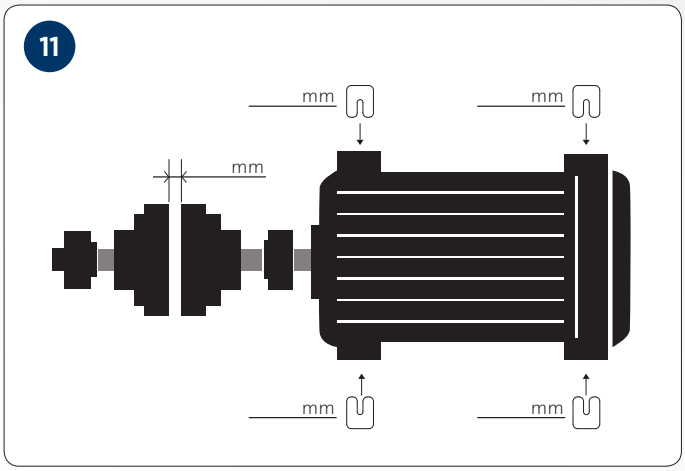
11
mm
mm
mm
mm
mm

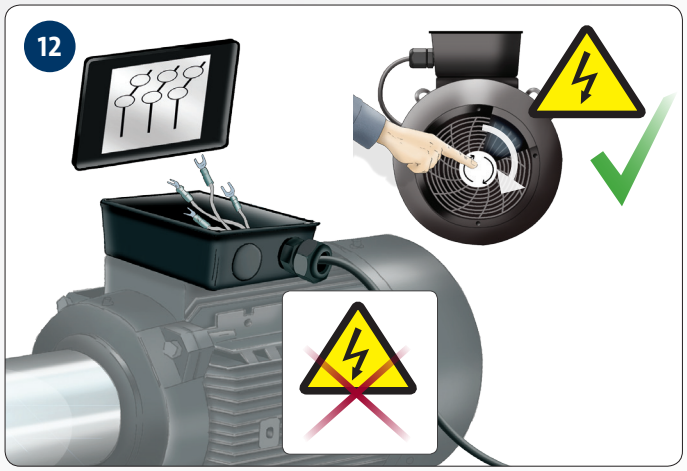
12